DETAIL #:
0300-PLM-1102
Aussie Shiled 300-PLM

Window Flange Flashing Pre-Treatment, then 300-PLM

Aussie Shield 300-PLM/PLF

AVM INDUSTRIES INC

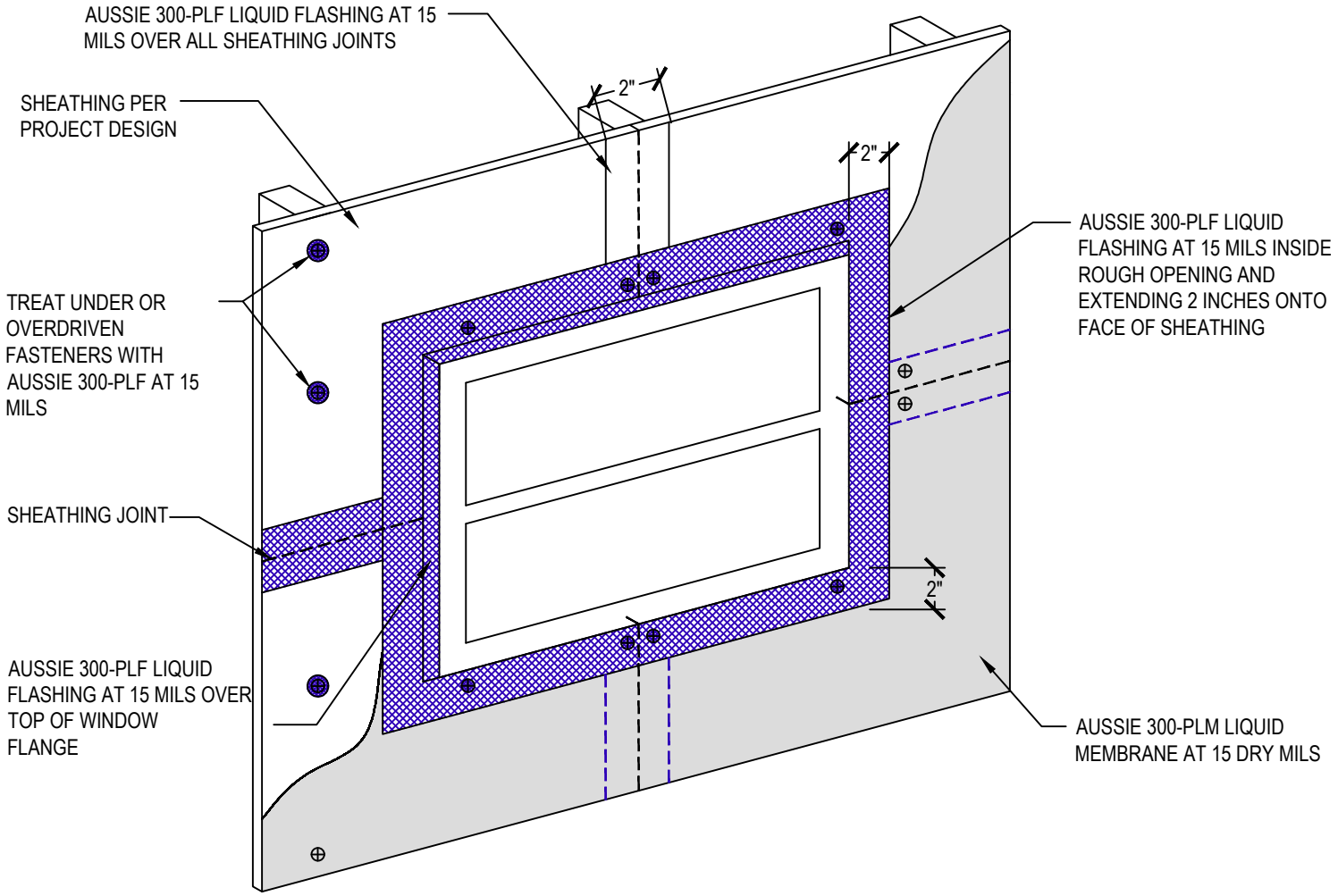

AVM Industries, Inc.
8245 Remmet Ave, Canoga Park, CA 91304

Quality Waterproofing Products

888.414.1041 818.888.0050
www.avmindustries.com

FILE NAME: 0300-PLM-1102

Protected by Copyright - AVM Industries, Inc. Revision Date 7/19/2024